# 2.5L HEV
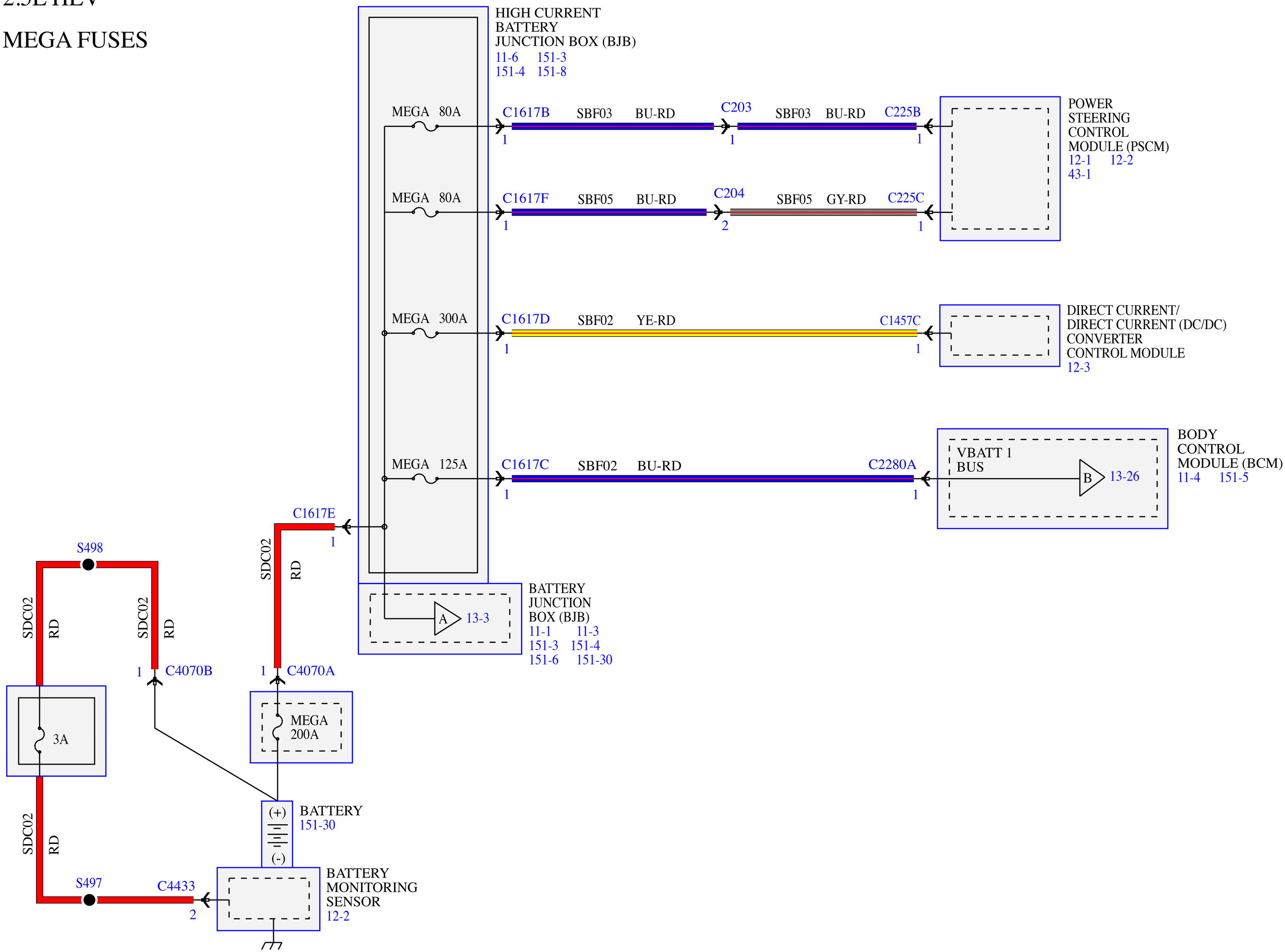
# MEGA FUSES