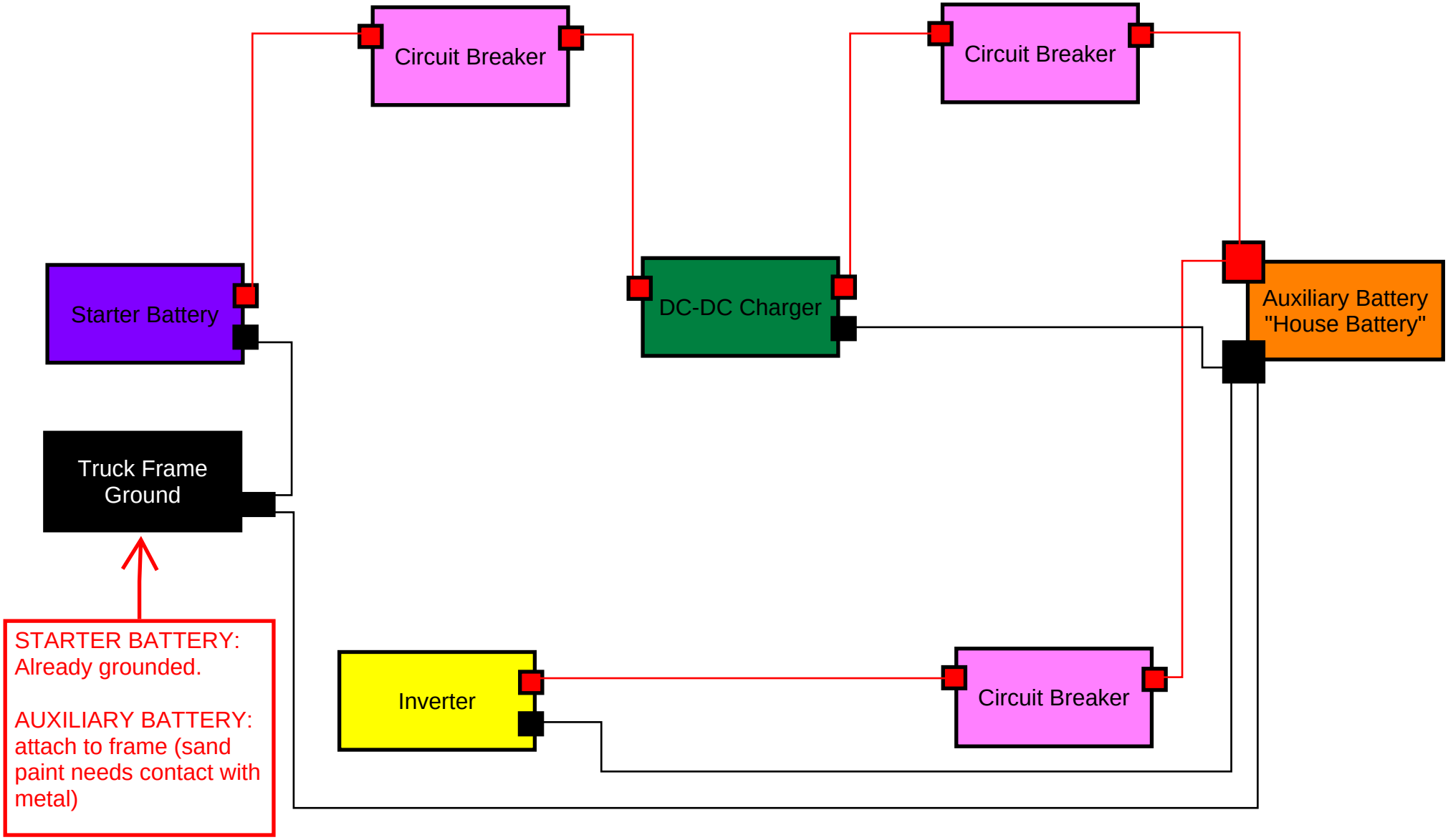
Circuit Breaker
Circuit Breaker
Starter Battery
DC-DC Charger
Auxiliary Battery
"House Battery"
Truck Frame
Ground
STARTER BATTERY:
Already grounded.
AUXILIARY BATTERY:
attach to frame (sand
paint needs contact with
metal)
Inverter
Circuit Breaker