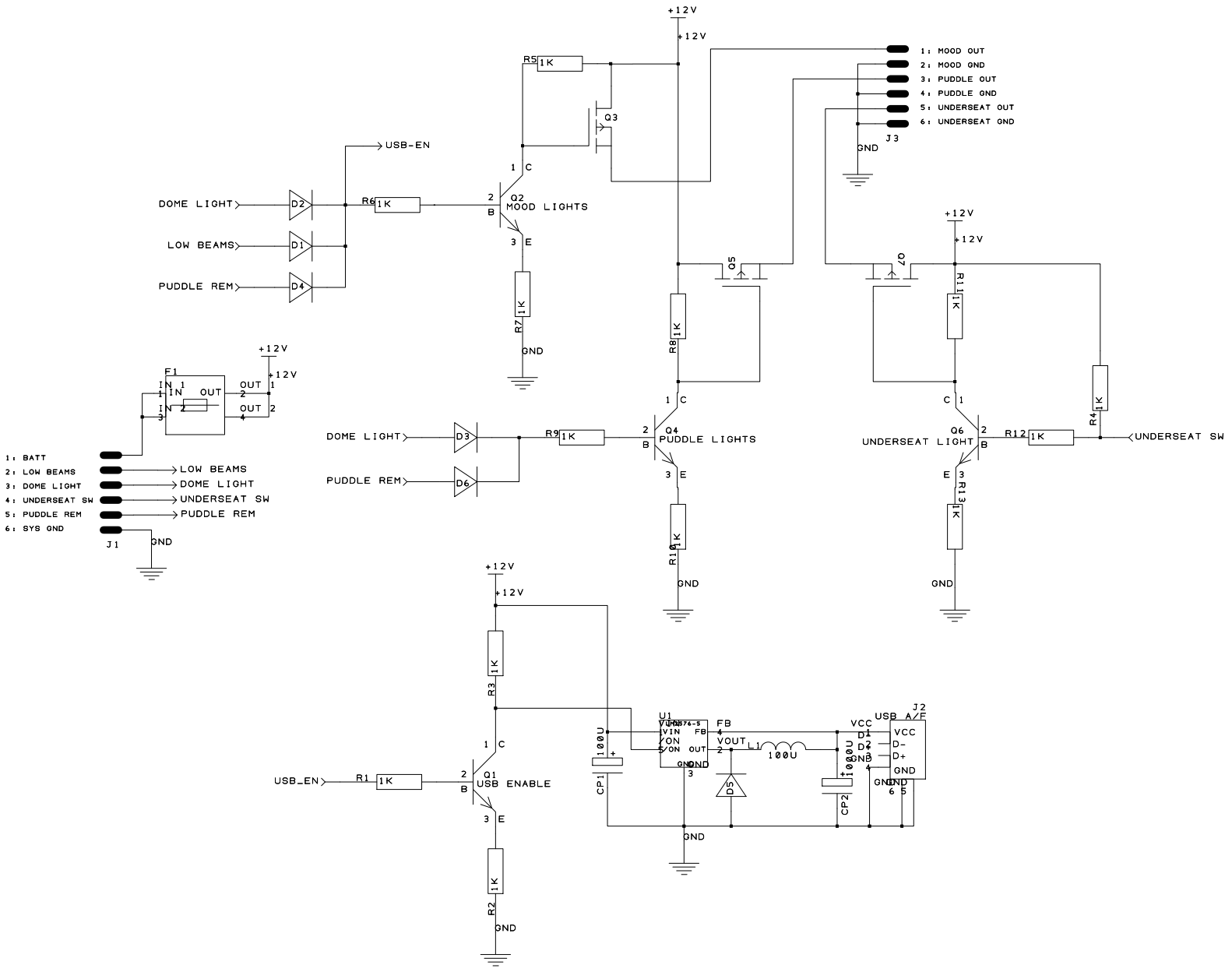
+12V
R5 1K
Q3
1: MOOD OUT
2: MOOD GND
3: PUDDLE OUT
4: PUDDLE GND
5: UNDERSEAT OUT
6: UNDERSEAT GND
J3
GND
USB-EN
DOME LIGHT
D2
R6 1K
Q2
MOOD LIGHTS
LOW BEAMS
D1
PUDDLE REM
D4
R7 1K
Q5
Q7
R8 1K
R11 1K
R4 1K
F1
IN
OUT
1: BATT
2: LOW BEAMS
3: DOME LIGHT
4: UNDERSEAT SW
5: PUDDLE REM
6: SYS GND
J1
D3
R9 1K
Q4
PUDDLE LIGHTS
D6
R10 1K
Q6
UNDERSEAT LIGHT
R12 1K
UNDERSEAT SW
R13 1K
R3 1K
USB_EN
R1 1K
Q1
USB ENABLE
R2 1K
U1
LM2574-5
VIN
ON
FB
VOUT
GND
L1 100U
D5
CP1 100U
CP2 100U
J2
USB A/F
VCC
D-
D+
GND