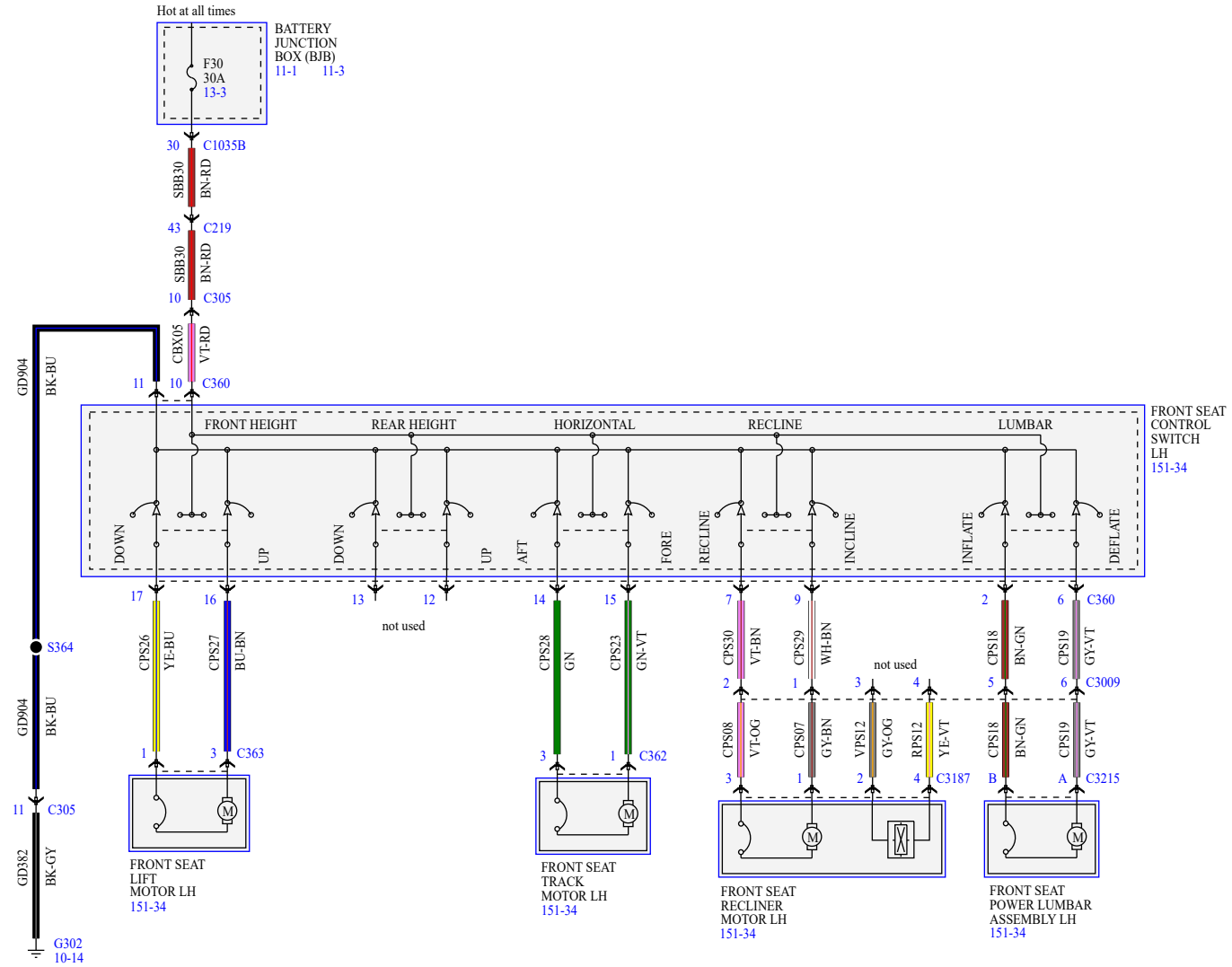POWER SEAT - DRIVER