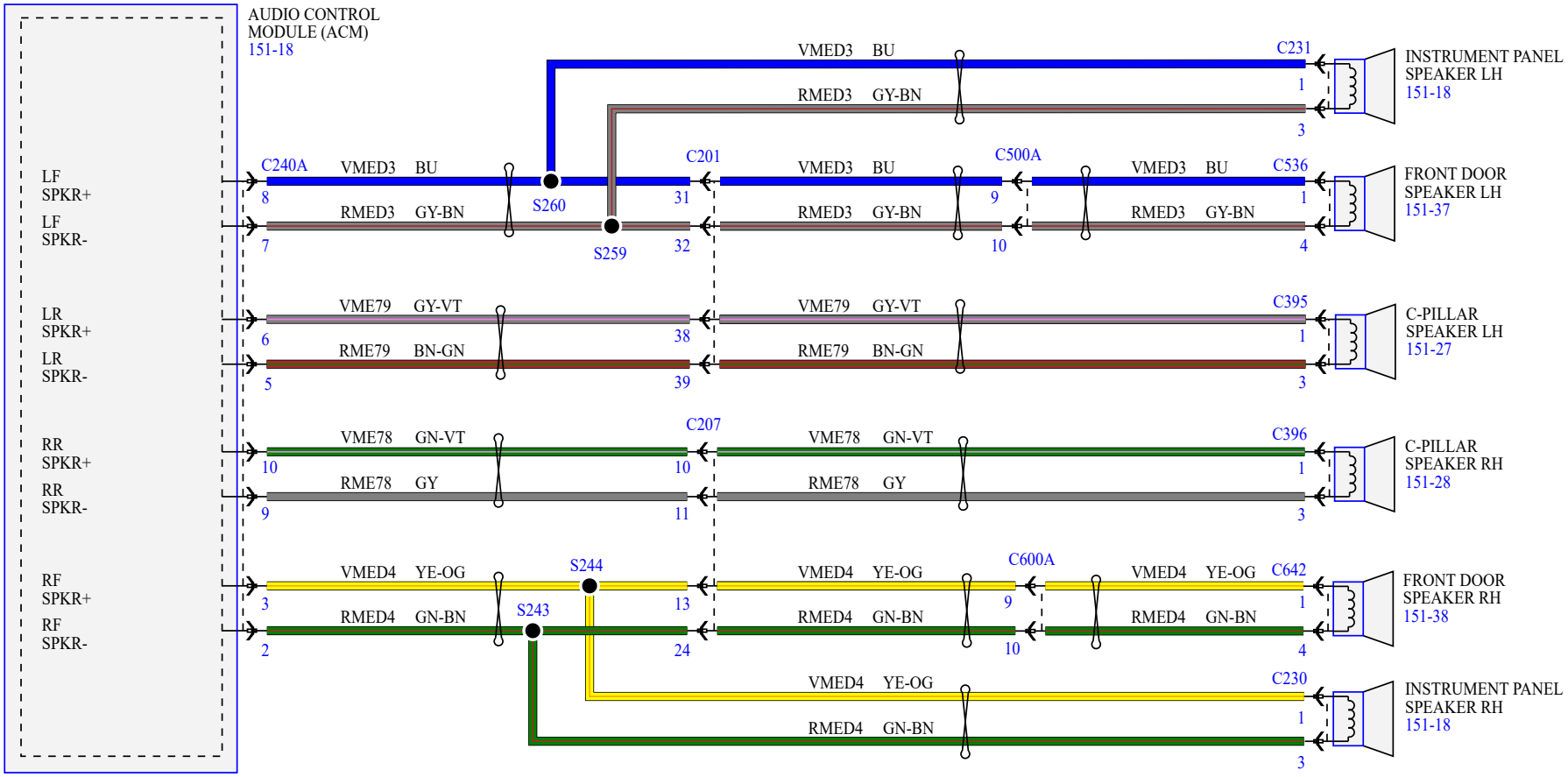6 SPEAKER SYSTEM